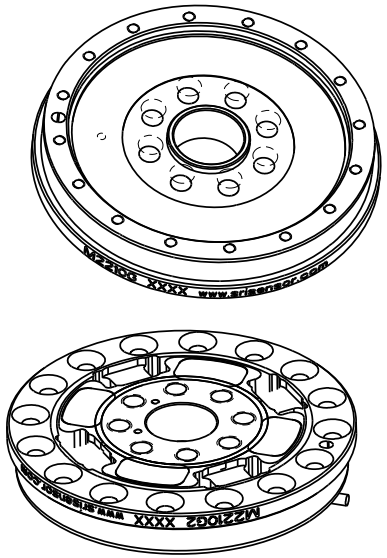

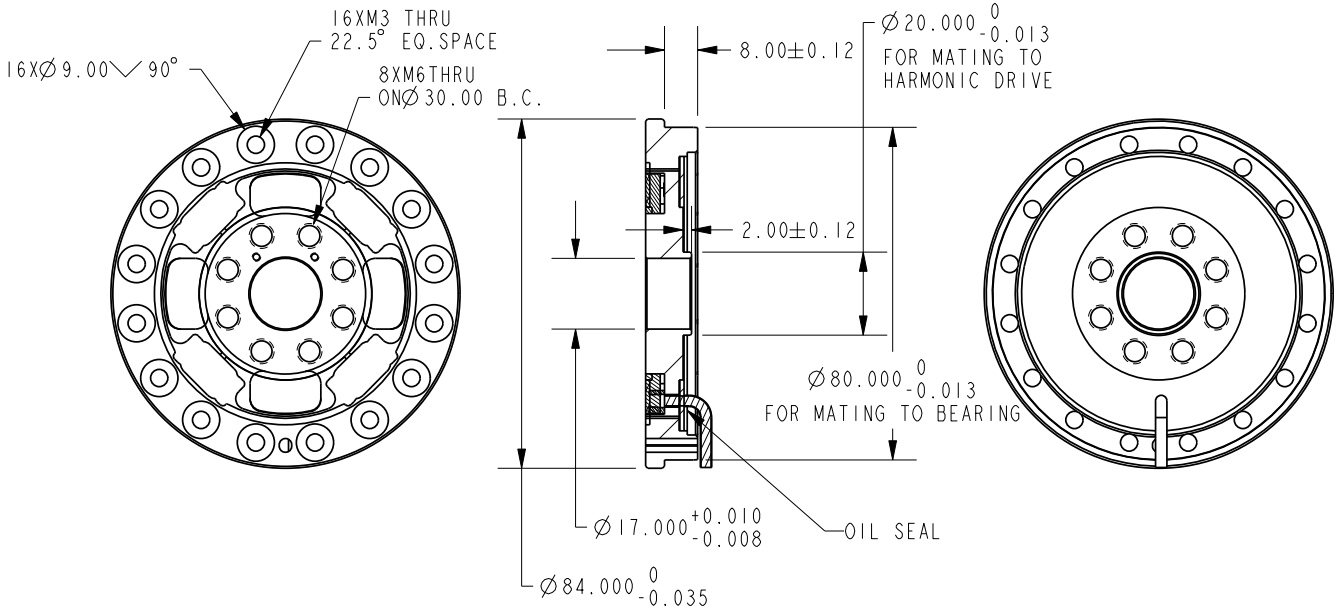

NOTE: THE OVERLOAD CAPACITIES FOR BENDING MOMENT, AXIAL AND RADIAL FORCE EXCEED 300% OF THOSE USED FOR CROSSTALK MEASUREMENT

M2210G IS DESIGNED TO MATE TO HARMONIC DRIVE AND BEARING DIRECTLY

SPECIFICATIONS	
CAPACITY (Nm)	150
OVERLOAD CAPACITY (%F.S.)	250
OUTPUT @ F.S. (V) NOMINAL	2.5±2 *
POWER SUPPLY (V)	4.5-5V, 25MA
BRIDGE RESISTANCE (Ω) NOMINAL	350
NON-LINEARITY (%F.S.)	0.5
HYSTERESIS (%F.S.)	1.0
OPERATING TEMP. RANGE (°C)	-20 TO +85
CROSSTALK (%F.S.)	1.0
AXIAL FORCE FOR CROSSTALK (N)	500
RADIAL FORCE FOR CROSSTALK (N)	500
BENDING MOMENT FOR CROSSTALK (Nm)	50
TORSION ANGLE (CALCULATED)	0.05°
TORSIONAL STIFFNESS (KNm/RAD)	170
MASS (KG)	0.32

DRAWING IN THIRD ANGLE PROJECTION

* WHEN PWR SUPPLY IS 4.5V, OUTPUT WILL BE 2.25±1.75V

WIRING CODE	
COLOR	FUNCTION
RED	+EX
GREEN	+SIG
BLACK	GND
BROWN	-SIG

SUNRISE INSTRUMENTS

www.srisensor.com

SINGLE AXIS TORQUE LOADCELL
D84MM, 150 Nm

UNLESS OTHERWISE SPECIFIED DIMENSIONS ARE IN MM	M2210G2	REV. A